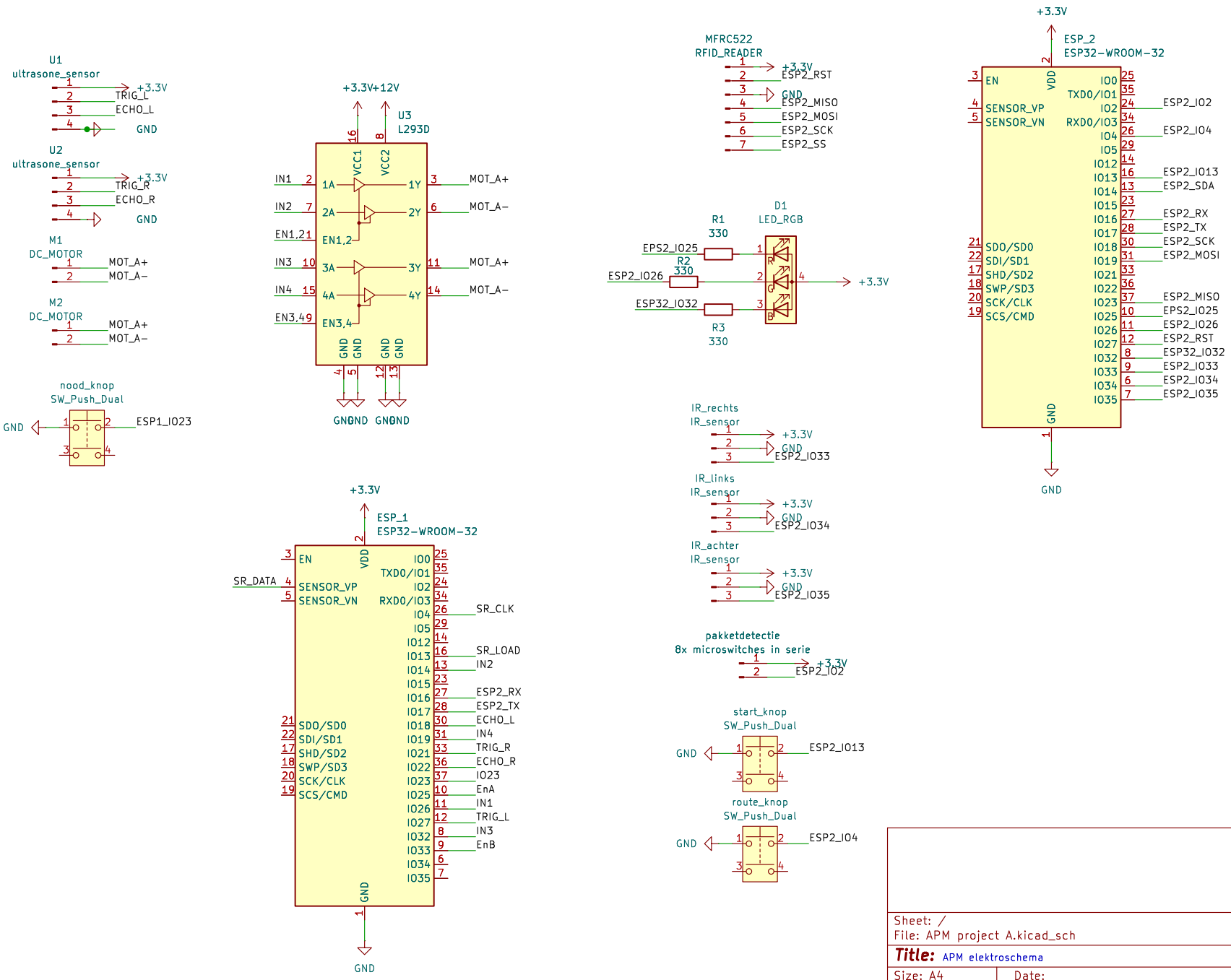

Sheet: /
File: APM project A.kicad_sch

Title: APM elektroschema

Size: A4	Date:	Rev:
KiCad E.D.A. 9.0.6		Id: 1/1